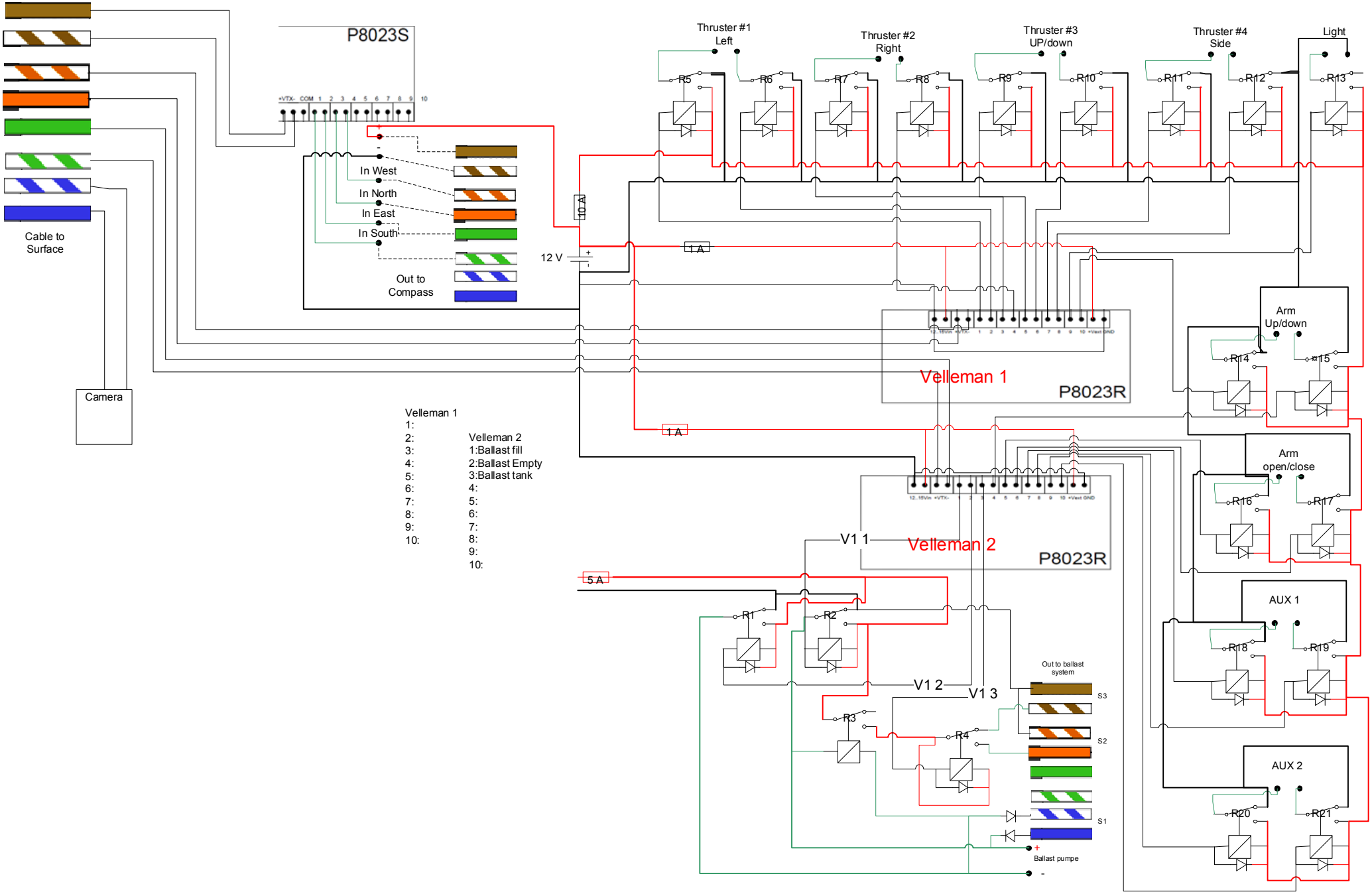ROV PT 2
Control